Europe: +49 / 7731 8399 0 | Email: info@meder.com
USA: +1 / 508 295 0771 | Email: salesusa@meder.com
Asia: +852 / 2955 1682 | Email: salesasia@meder.com

Item No.:
2500000056
Item:
MS06/5-PP
floating magnet

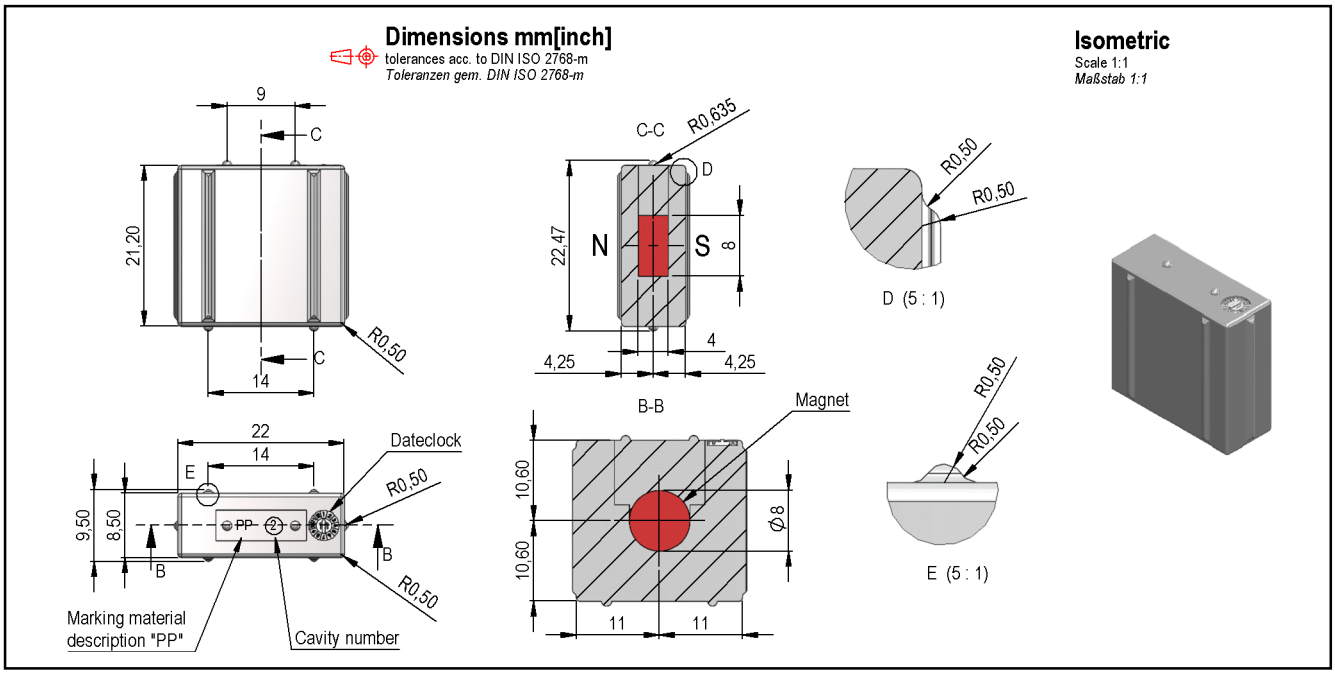

Special Product Data	Conditions	Min	Typ	Max	Unit
Float weight				3,5	g
Material of float		PP dark grey, FDA approved			

Mag. values DIN IEC 60404-8-	Conditions	Min	Typ	Max	Unit
Remanence Br		1.170	1.240		mT
Revers. temp. coeff. of Br			-0,11		%/K
Coercivity HcB		876	947		kA/m
Coercivity HcJ		1.353			kA/m
Revers. temp. coeff. of HcJ			-0,58		%/K
Density		7,5	7,6		g/cu cm
Max. operating temperature				120	°C
Magnetic flux			1.440		E-6 Vs
Magnetic moment	inclusive of 5% tolerance		22,4		E-6 Vs*cm
Magnet Material		NdFeB N35H, zinc plated			
Direction of Magnetization		axial			

General data	Conditions	Min	Typ	Max	Unit
Remarks		All details according to manufacturers information			