FIBOX
Enclosing innovations

WWW.FIBOXUSA.COM (888) 342-6987

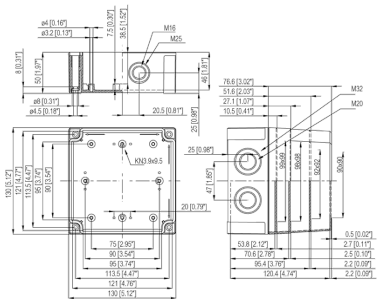

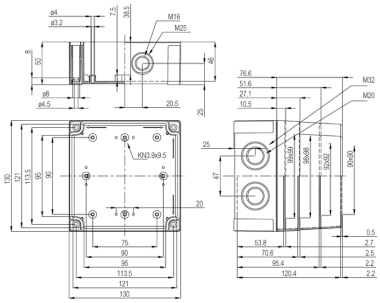

Product #: 6416309

Order Symbol: UL PCM 125/100 G

Description: 4.9 x 4.9 x 3.9 inch polycarbonate enclosure with gray cover and metric knock-out base

Remarks: Grey Cover

Dimensions	Height	Width	Depth
Inch	4.9	4.9	3.9
mm	130	130	100

Materials	
Material:	Polycarbonate
Base color:	RAL 7035 -light grey
Cover color:	RAL 7035 -light grey
Gasket material:	Polyurethane

Temperatures	
Temperature °F (short term):	-40 … 250
Temperature °F (continuous):	-40 … 175
Temperature °C (short term):	-40 … 140
Temperature °C (continuous):	-40 … 80

Ratings	
Ingress Protection (EN 60529):	IP66; IP67
Impact Resistance (EN 62262):	IK08
Electrical insulation:	Totally insulated
Halogen free (DIN/VDE 0472, Part 815):	No
UV resistance:	UL 508
Flammability Rating:	UL94-5VA (f1)
Glow Wire Test (IEC 60695):	960 °C
UL/cUL Type:	1, 4, 4x and 6;