FIBOX
Enclosing innovations

WWW.FIBOXUSA.COM (888) 342-6987

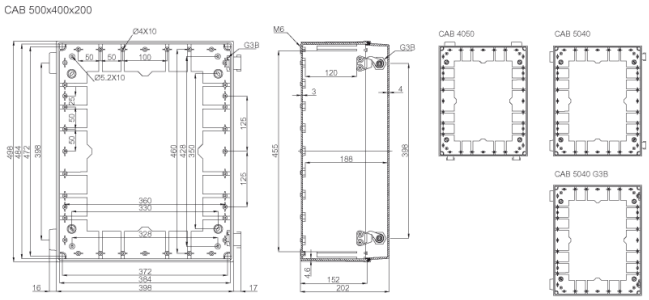

Product #: 8143061

Order Symbol: UL CAB PC 405020 T

Description: 15.7 x 19.7 x 7.9 inch polycarbonate enclosure with a Smoked transparent door, and latches on the short side

Dimensions	Height	Width	Depth
Inch	15.7	19.7	7.9
mm	400	500	200

Materials	
Material:	Polycarbonate
Base color:	RAL 7035 -light grey
Cover color:	Transparent
Gasket material:	Polyurethane

Temperatures	
Temperature °F (short term):	-40 … 250
Temperature °F (continuous):	-40 … 175
Temperature °C (short term):	-40 … 140
Temperature °C (continuous):	-40 … 80

Ratings	
Ingress Protection (EN 60529):	IP65
Impact Resistance (EN 62262):	IK08
Electrical insulation:	Totally insulated
Halogen free (DIN/VDE 0472, Part 815):	No
UV resistance:	UL 508
Flammability Rating:	UL94-5VA (f1)/ Cover: UL94-V0 (f1)
Glow Wire Test (IEC 60695):	960 °C
UL/cUL Type:	Type 1, 4, 4X, 12, and 13