Part Number: **XZMDH106W**

APOLLO

PRELIMINARY SPEC

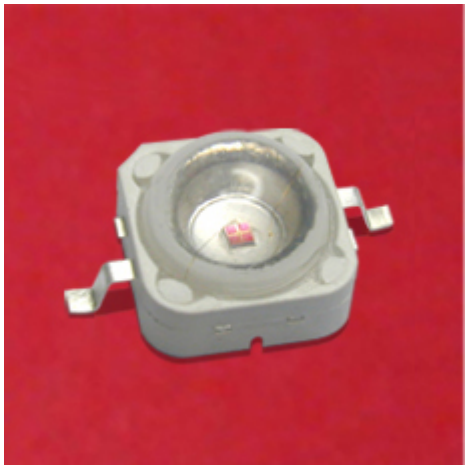

Features

- SUPER HIGH FLUX OUTPUT AND HIGH LUMINANCE.
- DESIGNED FOR HIGH CURRENT OPERATION.
- LOW THERMAL RESISTANCE.
- LOW VOLTAGE DC OPERATED.
- SUPERIOR ESD PROTECTION.
- PACKAGE: 500PCS/REEL.
- NOT REFLOW COMPATIBLE.
- THE COMPONENT IS INTERNALLY PROTECTED WITH SILICONE GEL.
- RoHS COMPLIANT.

Applications

- Traffic signaling.
- Backlighting (illuminated advertising , general lighting).
- Interior and exterior automotive lighting.
- Substitution of micro incandescent lamps.
- Portable light source (e.g. bicycle flashlight).
- Signal and symbol luminaire for orientation.
- Marker lights (e.g. steps, exit ways, etc).
- Decorative and entertainment lighting .
- Indoor and outdoor commercial and residential architectural lighting.

Outline Drawings

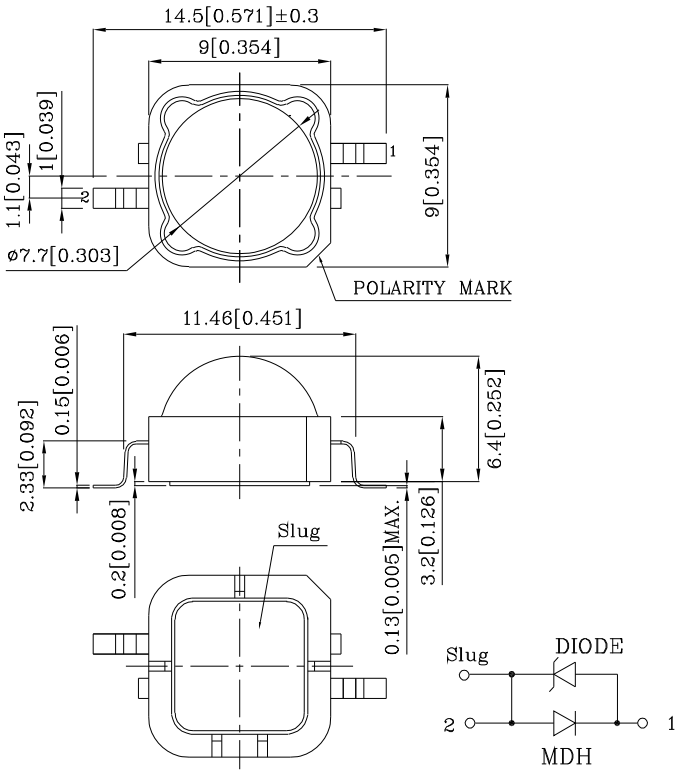

Notes:

1. All dimensions are in millimeters (inches).
2. Tolerance is ± 0.25(0.01") unless otherwise noted.
3. Specifications are subject to change without notice.

Part Number	Emitting Color	Emitting Material	Lens-color	Luminous Intensity (IF=350mA) cd		Wavelength nm λ P	Viewing Angle 2 θ 1/2 [2]
				min.	typ.		
XZMDH106W	Reddish-Orange	InGaAlP	Water Clear	8	12	640	100°

Absolute Maximum Ratings at T_A=25°C

Parameter	Symbol	Value	Unit
Power dissipation	P_t	0.88	W
Junction temperature	T_J	110	°C
Operating Temperature	Top	-40 To +100	°C
Storage Temperature	Tstg	-40 To +100	°C
DC Forward Current [1]	I_F	350	mA
Peak Forward Current [3]	I_{FM}	500	mA
Thermal resistance [1]	$R_{th\ j\text{-}slug}$	12	°C/W
Electrostatic Discharge Threshold (HBM)		8000	V
Iron Soldering [4]	350°C For 3 Seconds		

Notes:
1.Metal Core PCB is mounted on the heat Fins.
2.θ 1/2 is the angle from optical centerline where the luminous intensity is 1/2 the optical centerline value.
3.1/10 Duty Cycle, 0.1ms Pulse Width.
4. 1.29mm below package base.

Electrical / Optical Characteristics at T_A=25°C

Parameter	Symbol	Value	Unit
Wavelength of peak emission I_F=350mA [Typ.]	λ peak	640	nm
Dominant Wavelength I_F=350mA [Typ.]	λ dom	625	nm
Spectral bandwidth at 50%$\Phi_{REL\ MAX}$ I_F=350mA [Typ.]	Δλ	30	nm
Forward Voltage I_F=350mA [Min.]	V_F	2.0	V
Forward Voltage I_F=350mA [Typ.]		2.5	
Forward Voltage I_F=350mA [Max.]		3.0	
Temperature coefficient of lpeak I_F=350mA, -10°C≤ T≤100°C [Typ.]	TC λ peak	0.12	nm/°C
Temperature coefficient of ldom I_F=350mA, -10°C≤ T≤100°C [Typ.]	TC λ dom	0.05	nm/°C
Temperature coefficient of V_F I_F=350mA, -10°C≤ T≤100°C [Typ.]	TC_V	-2.6	mV/°C

XZMDH106W

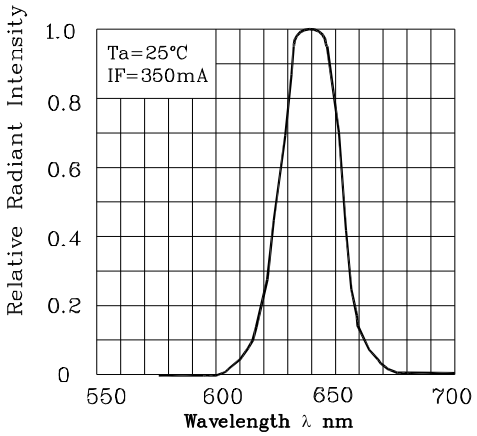

RELATIVE INTENSITY Vs. WAVELENGTH

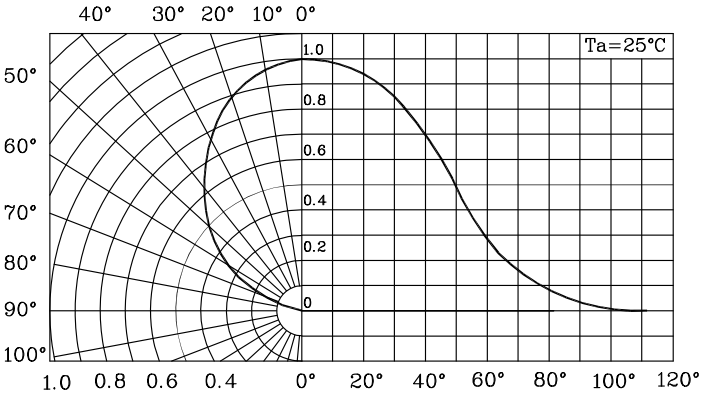

SPATIAL DISTRIBUTION

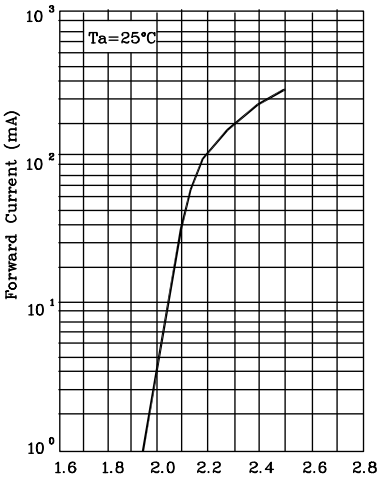

FORWARD CURRENT Vs.
FORWARD VOLTAGE

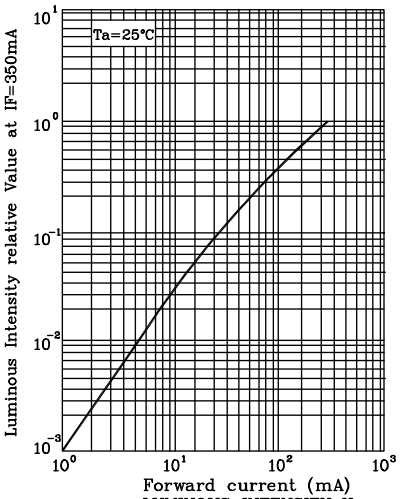

LUMINOUS INTENSITY Vs.
FORWARD CURRENT

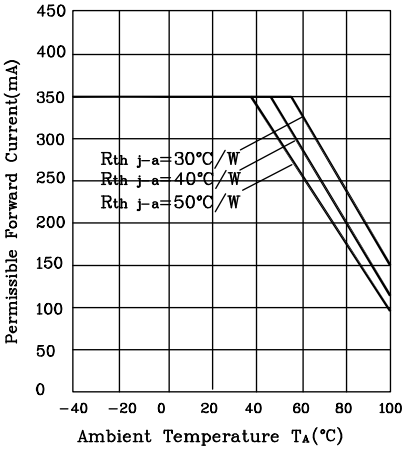

FORWARD CURRENT
DERATING CURVE

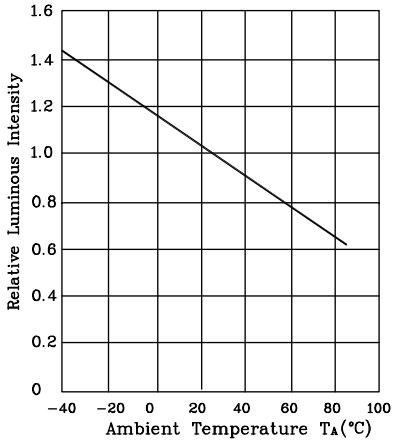

LUMINOUS INTENSITY VS.
AMBIENT TEMPERATURE

Recommended Soldering Pattern (Units : mm; Tolerance: ±0.1)

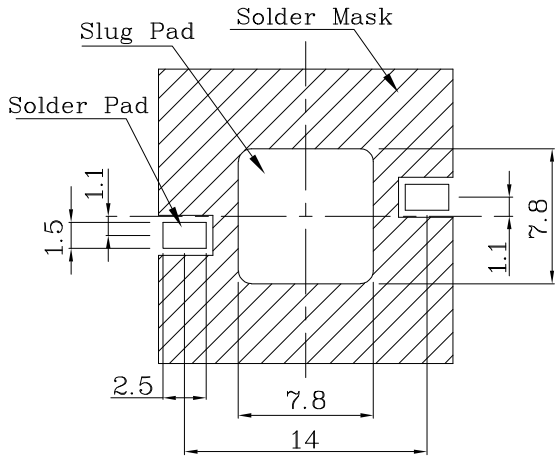

❖ **The device has a single mounting surface. The device must be mounted according to the specifications.**

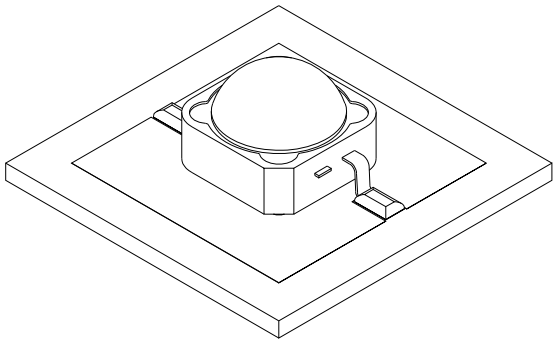

❖ **Tape Specification (Units : mm)**

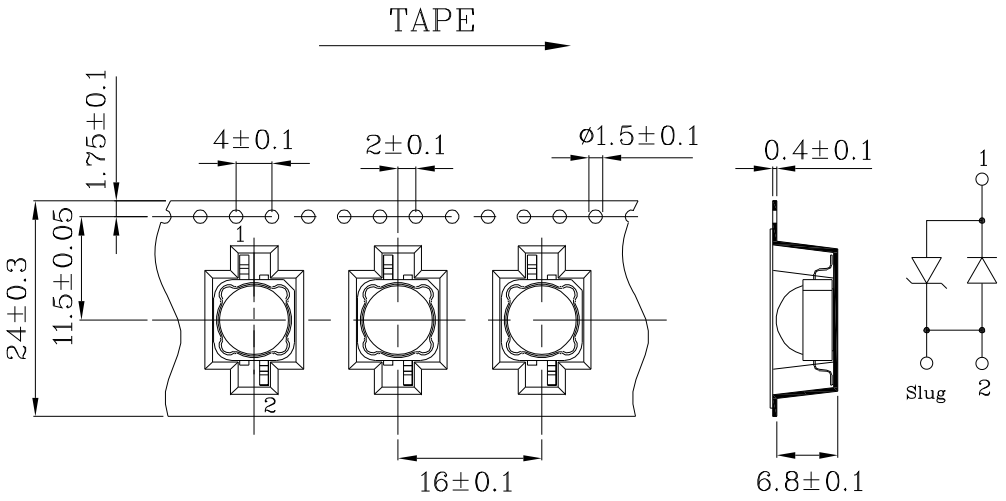

Remarks:

If special sorting is required (e.g. binning based on forward voltage, luminous intensity / luminous flux or wavelength), the typical accuracy of the sorting process is as follows:

1. Wavelength: +/-1nm
2. Luminous Intensity / Luminous Flux: +/-15%
3. Forward Voltage: +/-0.1V

Note: Accuracy may depend on the sorting parameters.

Recommended Solder Steps

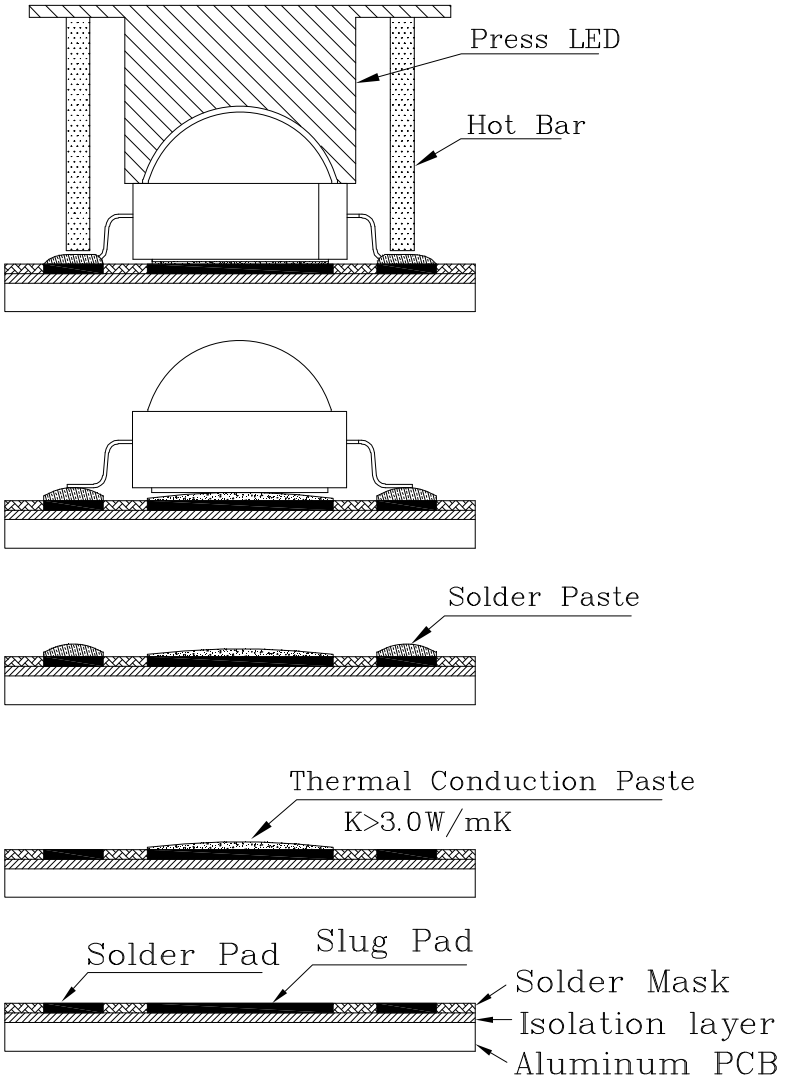

PACKING & LABEL SPECIFICATIONS XZMDH106W