MICRO SWITCH
A DIVISION OF MINNEAPOLIS-HONEYWELL REGULATOR COMPANY
FREEPORT, ILLINOIS
FED. MFR. CODE 91929

ACTUATOR — SWITCH

CATALOG LISTING
JS - 7

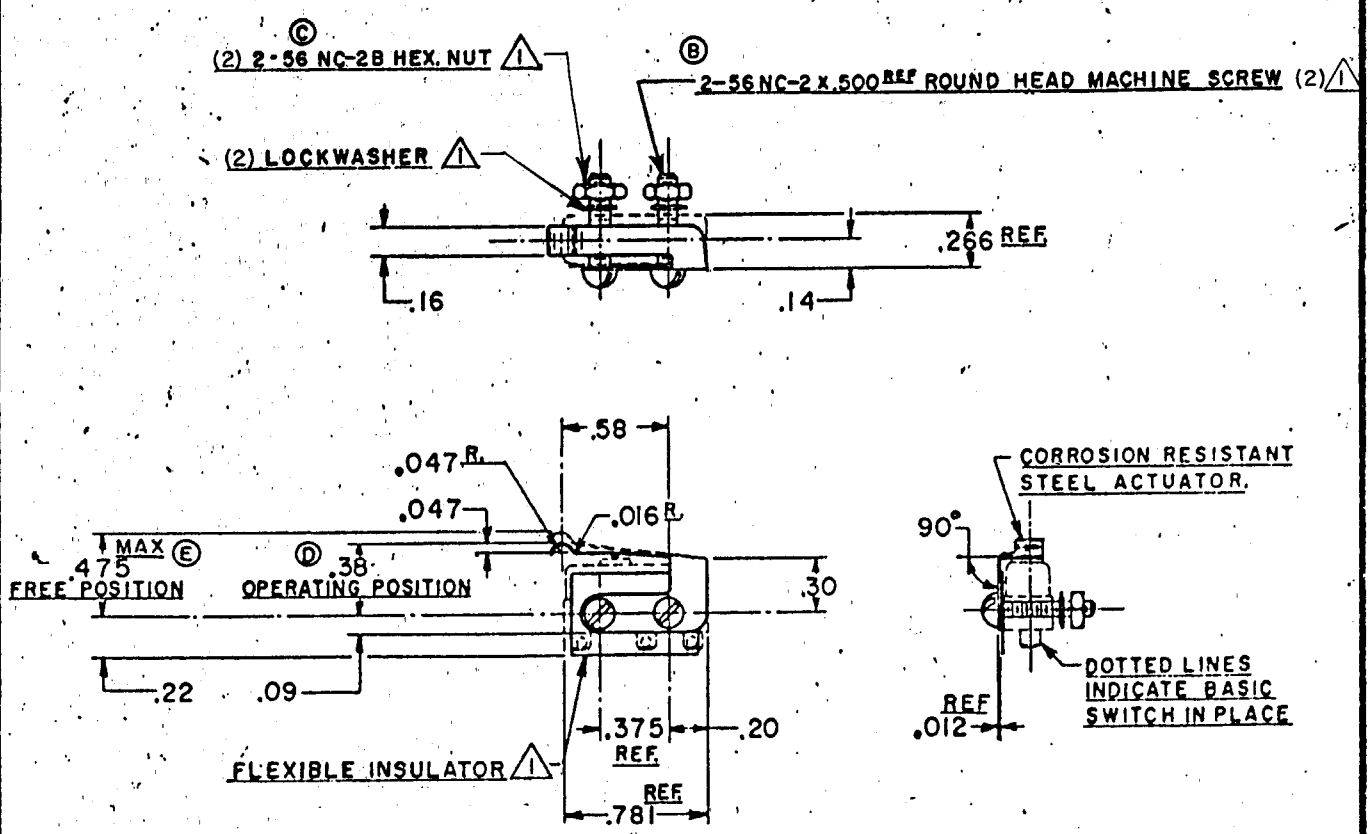

NOTE-
△1 FURNISHED UNASSEMBLED

THIS DRAWING COVERS A PROPRIETARY ITEM AND IS THE PROPERTY OF MICRO SWITCH, A DIVISION OF HONEYWELL. THIS DRAWING IS NOT TO BE COPIED OR USED WITHOUT THE APPROVAL OF MICRO SWITCH.

CHARACTERISTICS WITH ISMI BASIC SWITCH INSTALLED

OPERATING FORCE - - - - - 10 OZ. MAX.
(E)
RELEASE FORCE - - - - - - 2 OZ. MIN.
PRETRAVEL - - - - - - - - - .094 MAX.
DIFFERENTIAL TRAVEL - - - - .015 MAX.
OVERTRAVEL - - - - - - - - - .015 MIN.
(D)

ELECTRICAL DATA

CONTACT ARRANGEMENT	BREAK DISTANCE

SCALE FULL
DO NOT SCALE PRINT

UNLESS OTHERWISE SPECIFIED
DIMENSIONS ARE IN INCHES
TOLERANCES ARE:

ONE PLACE	(.0)	±.030
TWO PLACE	(.00)	±.015
THREE PLACE	(.000)	±.005
ANGLES		±1°

WEIGHT

REVISIONS

A	CO 9600 R.E.R. 23 FEB. 56
B	CORR. K.A.F. 13 AUG. 57
C	CORR. K.A.F. 16 AUG. 57
D	CO12901 MBF 11 MAY 59
E	CO17304 MBF 20 JUNE 63
F	CO38560 JAL 13 JUN 77
G	CO47771 CJH 17 MAY 80
H	CO79303 DLT 7 MAR 95

DRAWN R.E.R. 23 FEB. 56
CHECK R.L.Z. 24 FEB. 56
CHECK D.L.S. 28 FEB. 56
CHECK E.J.J. 25 FEB. 56
RELEASE NO.
REPLACES (M) JS-7 ISSUE 5
DRAWING NUMBER M JS-7
ISSUE

74-96